Case & Crate Bin 3x2 Kit

Spec Sheet for CC2-BIN-S-2 (96-bottle wine storage kit, Backer included)

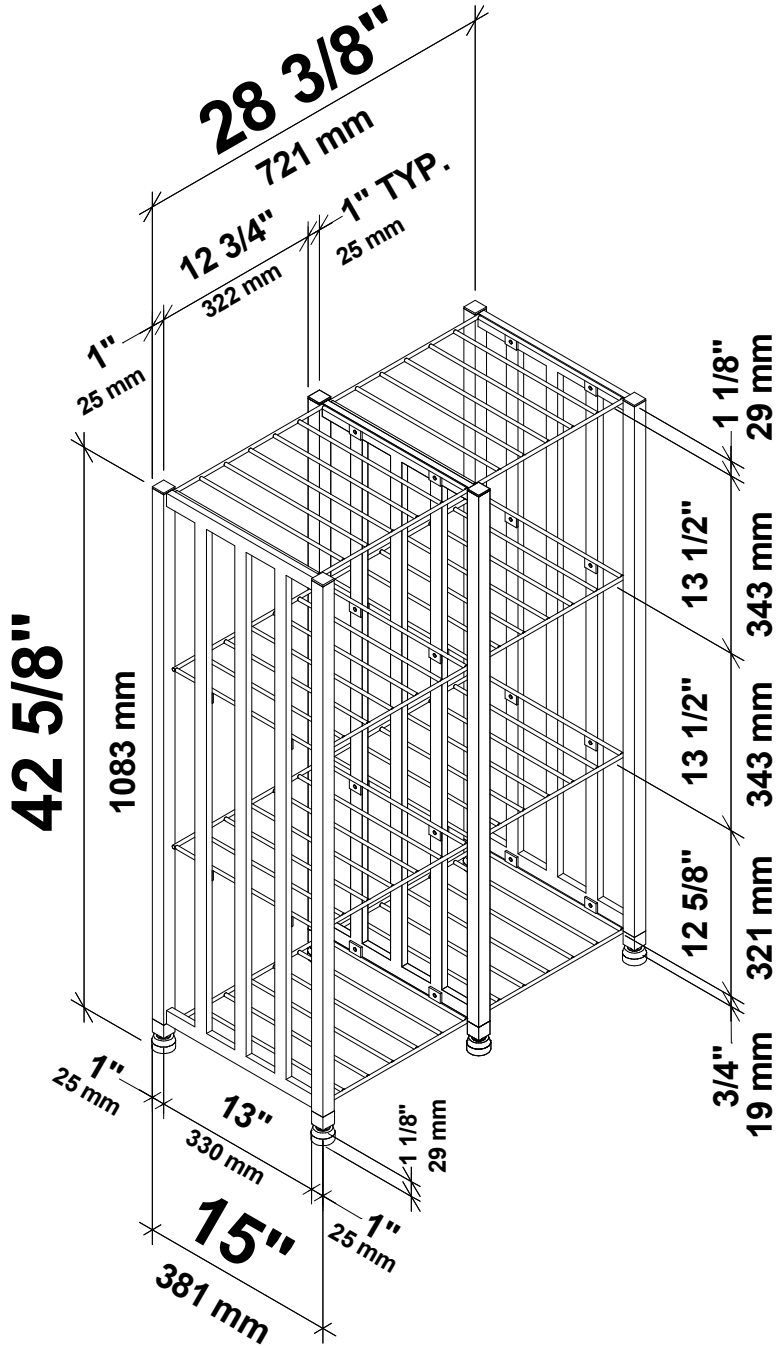

VINTAGEVIEW®
MOVING WINE STORAGE FORWARD

4690 Joliet St., Denver, CO 80239 | phone: 866.650.1500 | fax: 866.650.1501 | VintageView.com

For product warranty information, please visit vintageview.com/warranty